Your Peace of Mind is Our Top Priority®

Product information presented here reflects conditions at time of publication. Consult factory regarding discrepancies or inconsistencies.

ZOELLER®
PUMP COMPANY
Zoeller Family of Water Solutions™

MAIL TO: *P.O. BOX 16347 • Louisville, KY 40256-0347*
SHIP TO: *3649 Cane Run Road • Louisville, KY 40211-1961*
(502) 778-2731 • 1 (800) 928-PUMP • FAX (502) 774-3624

SECTION: 2.50.010
FM1478
0414
Supersedes
0609

visit our web site:
www.zoeller.com

THE SHARK Series® 820 GRINDER PUMP

UNIQUELY DESIGNED PUMP WITH INTEGRAL CONTROL

(For Pump Prefix Identification see News & Views 0052)

Tested to UL Standard UL778

C US (Tested to UL778 and CSA22.2 108 Standards)

DESIGNED • MACHINED • ASSEMBLED IN THE USA

WD820/WH820 AUTOMATIC

POWDER COATED TOUGH™

E820/I820 NONAUTOMATIC

Submersible Wastewater Pump Association
SWPA MEMBER

Product may not be exactly as pictured.

FEATURES:

- **Automatic with Integral Control, Nonautomatic available.**
- UL Listed.
- Durable Heavy Duty Finned Cast Iron Construction.
- Legs provide for free standing installation.
- Motor - 2 HP, 60 Hz, 3450 RPM, Oil-filled, Hermetically Sealed with Class B Insulation, Automatic Reset Thermal Overload Protected.
- Upper and Lower Ball Bearings Running in Bath of Oil.
- Hardened Stainless Steel Cutter and Disc.
- Cutters Protected from Abrasive Solids.
- Stainless Steel Lifting Handle, Screws, and Bolts.
- Easily adapts to Rail Systems.
- Mechanical Shaft Seal - Carbon/Ceramic.
- Control panels are not required.
- Simplex Grinder Package Systems (Unassembled and Job Ready/Assembled) available.
- Corrosion resistant powder coated epoxy finish.
- Maximum operating temperature 130°F (54°C).
- 20' Power Cord.

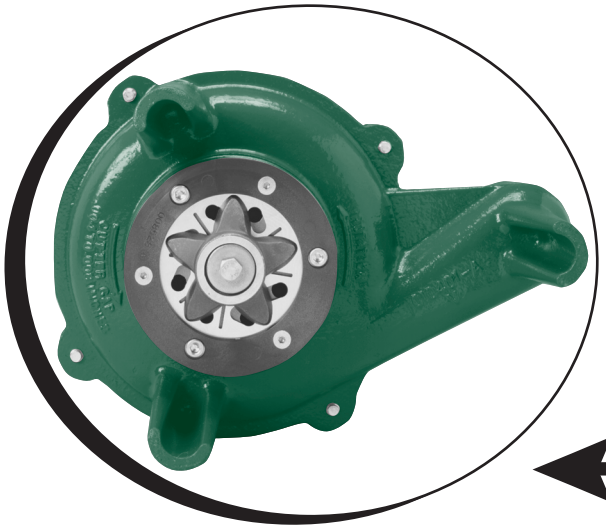

© Copyright 2014 Zoeller Co. All rights reserved.

GRINDER SYSTEMS

(A) GRINDER MODEL 820

STANDARD FEATURES:

- 1¼" NPT Vertical discharge
- Carbon/Ceramic Seal
- Thermal Overload protection
- Engineered, glass-filled plastic impeller with Stainless Steel insert
- Stainless Steel Cutter Plate/Cutter
- Stainless Steel Shaft
- Stainless Steel Hardware
- 20' Power Cord

OPTIONS:

☐ Extra Length Cords (Consult Factory)

(A) 820 GRINDER 2 HP, 1¼" N.P.T. VERTICAL DISCHARGE

P/N	WGT.	MODEL	VOLTS	PH	MODE	AMP
☐ 820-0011	89	WD820*	230	1	Auto	13.7
☐ 820-0004	88	E820	230	1	Nonauto	13.7
☐ 820-0005	89	WH820*	200	1	Auto	15.5
☐ 820-0006	88	I820	200	1	Nonauto	15.5

*** WD & WH grinder pumps are completely automatic with starting controls in pump switch case.**
Note: 230V pumps are supplied with a 20 amp plug.

(B) CONTROL PANELS & ALARM SYSTEMS

STANDARD FEATURES:

- Audible & Visual Alarm
- Alarm Silence Switch
- Test Switch for Alarm and Light
- UL Listed

Simplex Panels:

☐ *P/N* 10-1037 Includes Alarm & 3 Floats for E820.
☐ *P/N* 10-1038 Includes Alarm & 3 Floats for I820.
☐ *P/N* 10-0125* Includes Alarm & 3 Floats for E or I Models.

Alarm Paks Only:

☐ *P/N* 10-0053 Indoor only.
☐ *P/N* 10-0623 Outdoor.
☐ *P/N* 10-0126 Outdoor w/ Dry Alarm Contacts.

*Branch circuit protection provided by electrical installer.

INDOOR/OUTDOOR SYSTEM
† NEMA 4X SIMPLEX CONTROL PANEL WITH ALARM

INDOOR INSTALLATIONS
NEMA 1 ☐ *P/N* 10-1494

INDOOR/OUTDOOR SYSTEM
STANDARD ☐ *P/N* 10-0623
DELUXE ☐ *P/N* 10-0682

† Low voltage terminal connector for float switch.

(C) VARIABLE LEVEL FLOAT SWITCHES

☐ *P/N* 10-0033* Switch without Weight & Bracket for E820. *WGT.* 2.0
☐ *P/N* 10-0748 Switch without Weight & Bracket for I820. *WGT.* 2.0
☐ *P/N* 10-0661 1 Weight & Bracket only. *WGT.* 3.0
☐ *P/N* 10-0689 1 Weight only. *WGT.* 2.5
☐ *P/N* 10-1366 Set of Weights & Brackets. **Use with 10-0125/10-1037 and 10-1038.** *WGT.* 6.5

*Remove plug.

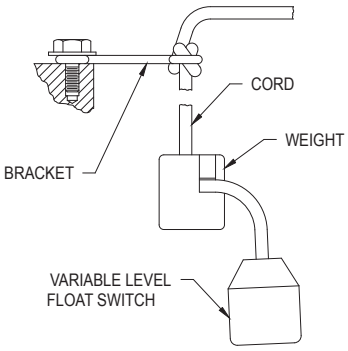

SK1328

Note: All variable level float switches in this section are mechanically activated and do not contain mercury.

(D) CHECK VALVES

1¼" Cast Iron NPT Female
☐ *P/N* 30-0163 *WGT.* 7.5
1½" Cast Iron NPT Female
☐ *P/N* 30-0164 *WGT.* 7.5
2" Cast Iron NPT Female
☐ *P/N* 30-0152 *WGT.* 10.0

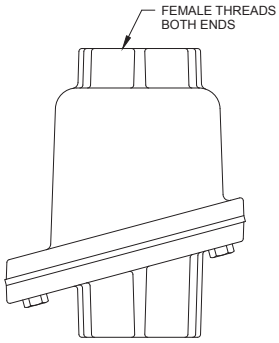

SK1330

(E) JUNCTION BOXES (Contact factory if used in conjuction with a control panel)

INDOOR BASIN INSTALLATIONS

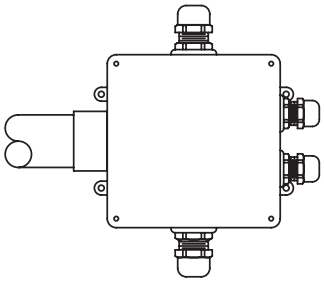

SK1628A

4 Holes with Seals for (1) Power Cord, (1) Pump Cord, (1) Alarm Switch, & (1) Alarm Return Feed.
☐ *P/N* 10-0666 *WGT.* 2.5

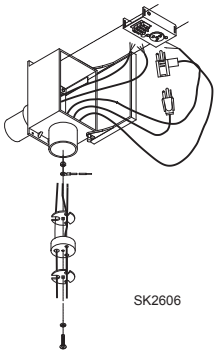

SK2606

Qwik-Box Connection **(For use with WD Models only)** with Seals for (1) Power Cord, (1) Pump Cord, and (1) Alarm Switch Cord. Alarm float switch must operate on low voltage to be used w/ Qwik Box.
☐ *P/N* 10-0580 *WGT.* 3.0

OUTDOOR BASIN INSTALLATIONS

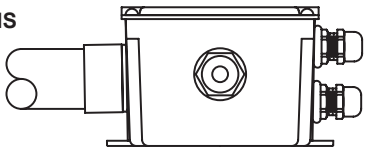

SK1628B

4 Holes with Seals for (1) Pump Cord, (3) Control Float Switch Cords and (1) Conduit Connection, **use with Control Panel/s (B).**
☐ *P/N* 10-0647 *WGT.* 2.5
4 Holes with Seals for (1) Pump Cord, (1) Control Float, (1) Alarm Switch, and (1) Conduit Connection for incoming power and alarm return.
☐ *P/N* 10-0677 *WGT.* 2.5

© Copyright 2014 Zoeller Co. All rights reserved.

(F) INDOOR BASIN, COVER, AND HARDWARE - PREPACKAGED STANDARD EQUIPMENT

- Fiberglass Basin
- Rust Resistant Steel Cover (epoxy coated)
- Inspection Plate
- Pump Cover
- 3" Adaptaflex Vent Seal
- 1¼" Adaptaflex Discharge Pipe Seal
- Cord Seal
- 1-4" Rubber Inlet Pipe Seal - Field Installed
- Pump Support Hardware
- 1¼" Check Valve
- Ball Valve

PUMP NOT INCLUDED

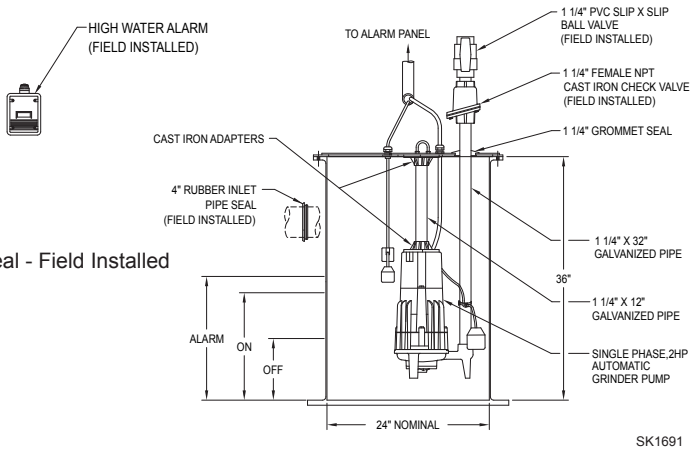

SIMPLEX

☐ 24" x 36" *P/N* 32-0011 *WGT.* 107

USE WITH AUTOMATIC PUMPS ONLY

(I) BALL VALVE

1¼" IPS
☐ *P/N* 30-0165 WGT. 2.0
1½" IPS
☐ *P/N* 30-0166 WGT. 2.0
2" IPS
☐ *P/N* 30-0167 WGT. 2.5

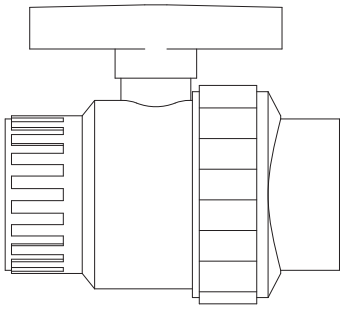

(G) OUTDOOR BASIN, COVER, AND RAIL SYSTEM ASSEMBLIES - STANDARD EQUIPMENT

- Fiberglass Basin with Anti-flotation Ring
- 1¼" PVC Discharge Pipe
- 1¼" Rubber Discharge Pipe Seal
- Stainless Steel Square Guide Rail
- 1' Pull Rod
- 8' SS Lifting Cable for basin depths to 84" (12' SS Lifting Cable for basin depths of 96")
- 1¼" PVC Ball Valve
- 1¼" Cast Iron Check Valve
- 1-4" Rubber Inlet Pipe Seal - Field Installed
- Fiberglass Cover

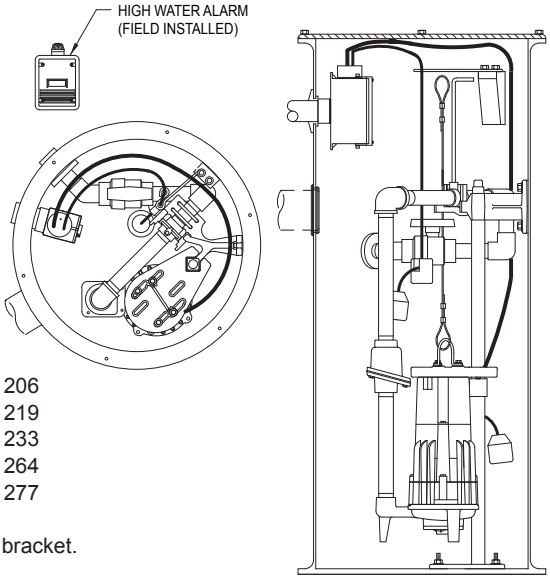

SIMPLEX

☐	24" x 48"	*P/N* 33-0185	*WGT.* 206
☐	24" x 60"	*P/N* 33-0186	*WGT.* 219
☐	24" x 72"	*P/N* 33-0187	*WGT.* 233
☐	24" x 84"	*P/N* 33-0188	*WGT.* 264
☐	24" x 96"	*P/N* 33-0189	*WGT.* 277

OPTIONS:

- 1¼" Stainless Steel pipe from pump to bracket.
- Anti-siphon Device.
- Pre-wired Conduit. (Consult Factory)

*Other sizes available. (Consult factory).

PUMP NOT INCLUDED

(J) PULL RODS FOR SQUARE GUIDE RAIL SYSTEMS ONLY (Field Installed Systems)

1 Ft. "L"
☐ *P/N* 39-0069 *WGT.* 0.5
2½ Ft. "L"
☐ *P/N* 39-0006 *WGT.* 1.0
3½ Ft. "L"
☐ *P/N* 39-0007 *WGT.* 1.5
4½ Ft. "L"
☐ *P/N* 39-0008 *WGT.* 1.5
5½ Ft. "L"
☐ *P/N* 39-0009 *WGT.* 2.0

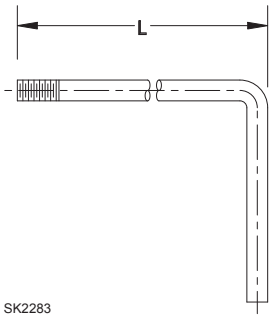

(H) RAIL SYSTEMS - (FIELD INSTALLED)

Z-Rail Disconnect System for 1¼" pump discharges (Rail System discharge is 2" NPT male thread)

Ductile Iron Constructions
☐ *P/N* 39-0134 *Wgt.* 43

With Stainless Steel Upper Rail Support
☐ *P/N* 39-0135 *Wgt.* 43

Intermediate Stabilizer Bracket for every 12' of depth.

Stainless Steel
☐ *P/N* 39-0139 *Wgt.* 6.0

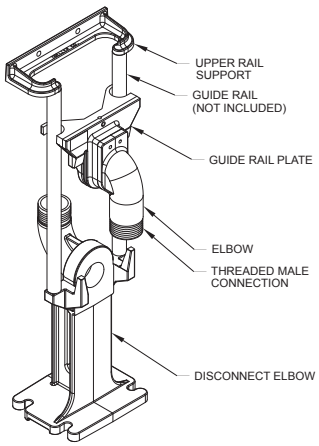

Square Guide Rail System for systems less than 96" deep)

BASIN DEPTH
☐ 48" *P/N* 39-0057 *WGT.* 90.5
☐ 60" *P/N* 39-0058 *WGT.* 94.5
☐ 72" *P/N* 39-0059 *WGT.* 98.5

Fits both round and square basins
Includes Square Guide Rail

Basins over 72" deep require one additional angle arm bracket.
☐ *P/N* 39-0070 *WGT.* 11

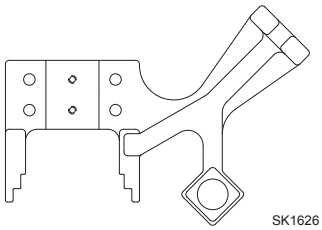

(K) SS LIFTING CABLE (Field Installed Systems)

8 Ft.
☐ *P/N* 39-0031 *WGT.* 1.0
12 Ft.
☐ *P/N* 39-0032 *WGT.* 1.0
16 Ft.
☐ *P/N* 39-0033 *WGT.* 1.0
20 Ft.
☐ *P/N* 39-0034 *WGT.* 1.0
24 Ft.
☐ *P/N* 39-0035 *WGT.* 1.0

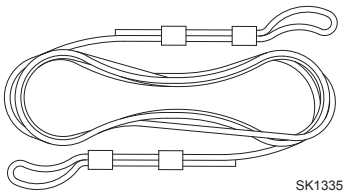

© Copyright 2014 Zoeller Co. All rights reserved.

PREPACKAGED AND JOB READY SYSTEMS

INDOOR

REQ.			
1	Grinder (Auto or Nonauto)	P/N _____	(A)
1	Alarm System (Optional)	P/N _____	(B)
1	Weight Only (Required if alarm is used)	P/N 10-0689	(C)
1	Junction Box (Optional)	P/N 10-0666	(E)
1	Basin, Cover and Hardware	P/N _____	(F)

OUTDOOR

REQ.			
1	Grinder (Auto or Nonauto)	P/N _____	(A)
1	Control Panel/Alarm System	P/N _____	(B)
1	Float Switch/es (if required)	P/N _____	(C)
1	Weight/s and Bracket/s	P/N _____	(C)
1	Junction Box	P/N _____	(E)
1	Basin, Cover and Rail System	P/N _____	(G)

FIELD MOUNT SYSTEMS

SIMPLEX

REQ.			
1	Grinder (Auto or Nonauto)	P/N _____	(A)
1	Alarm System (Optional)	P/N _____	(B)
1	Variable Level Fl. Sw. Assm.[2] (Not required for auto pumps)	P/N _____	(C)
1	Weight and Bracket Only (2 required if alarm is used)	P/N 10-0661	(C)
1	Junction Box (Optional)	P/N _____	(E)
1	Rail System (Optional)	P/N _____	(H)
1	Angle Arm/Intermediate Bracket[1]	P/N _____	(H)
1	Pull Rod [3]	P/N _____	(J)
1	S.S. Cable	P/N _____	(K)

[1] Required for basins over 72" deep (Square Guide Rail) and over 12" (E-Z Out Rail). Allow for overhead clearances.
[2] Hardwire pump, float switch, and power supplyinside junction box.
[3] For Square Guide Rail Only

Note: *Contact factory for control panel selection.*

Note: *Access Doors Available on Field Mount Systems - Consult Factory*
Special Basin Configurations - Consult Factory

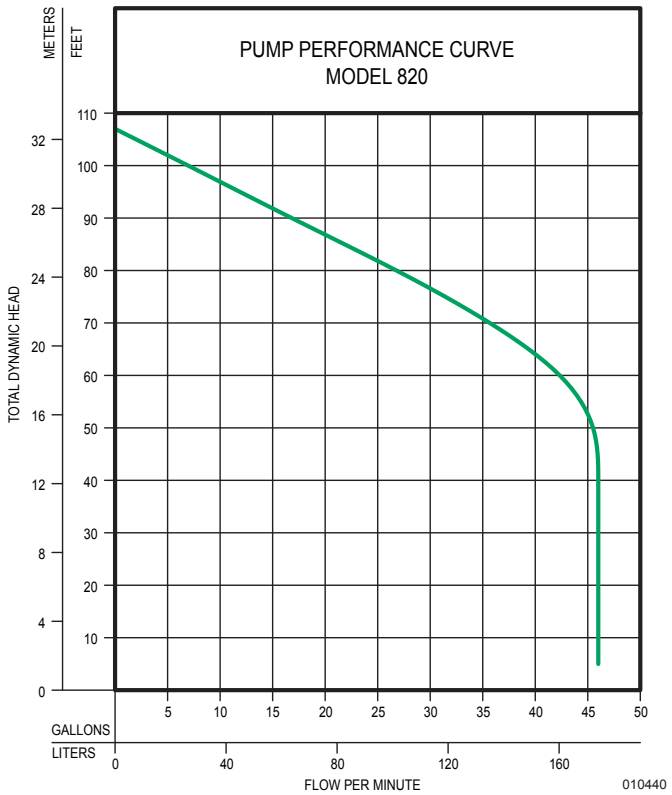

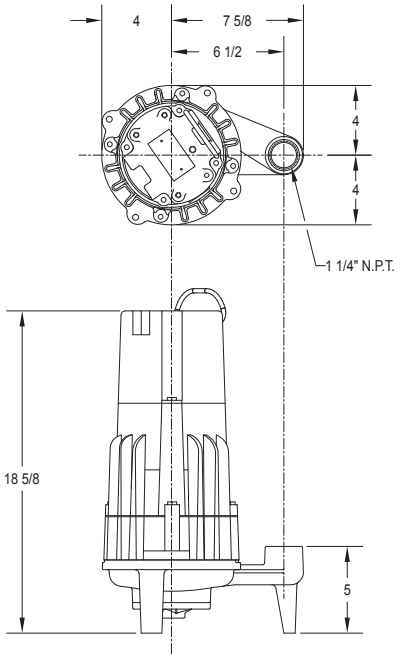

Your Peace of Mind is Our Top Priority®

© Copyright 2014 Zoeller Co. All rights reserved.